DATASHEET

STEP MANHOLE NO.2
E3409

Telenco

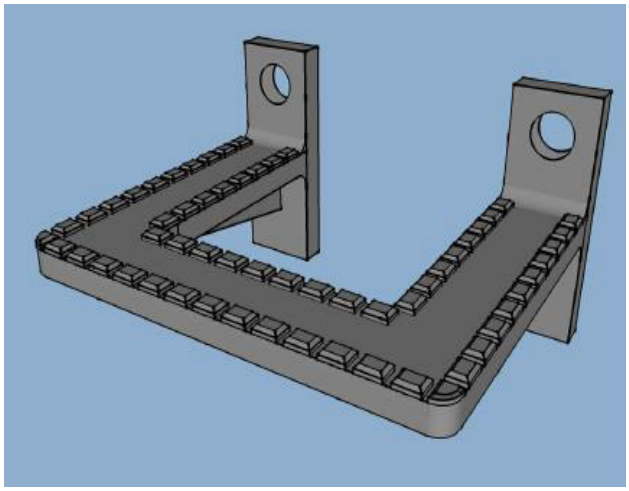

Weight: 1.21KG

DESCRIPTION

Replacements for missing or broken steps in manholes, they are fixed to underground walls with Bolt Expansion 1A

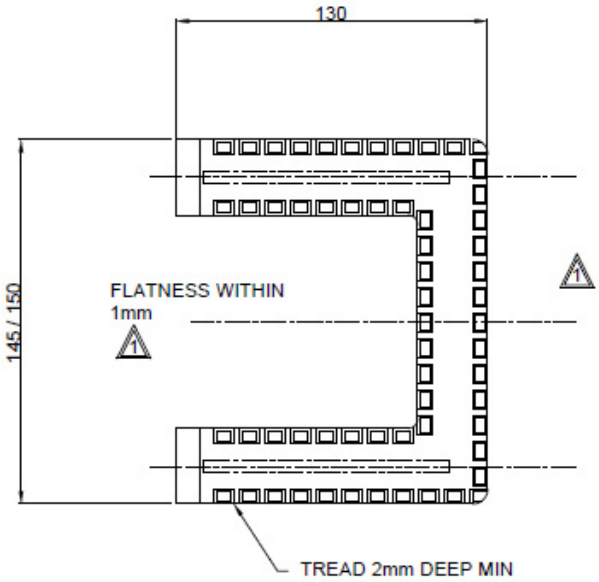

TECHNICAL SPECIFICATION

Order Code	E3409
Description	Step Manhole No.2 (Bolt on Step Irons)
Material	Malleable Iron to BS6681 Grade B35/12 or spheroidal graphite iron (ductile) complying with grades 500/7 or 600/3 of BS23789
Finish	Galvanised to BS1461
Tolerances	General Tolerance is +1.0 mm
Dimensions	See Below
Weight (each)	1.21 KG

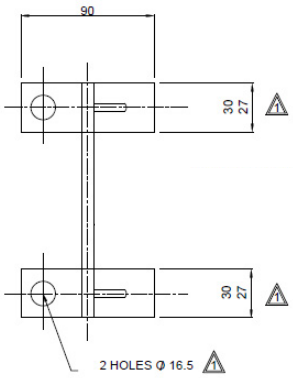

CODE	MODEL	DIMENSIONS	WEIGHT
E3409	Step Manhole No.2	See Above	1.21 KG

Non-contractual pictures, FT-EN00000x_0000©0000Telenco(T)